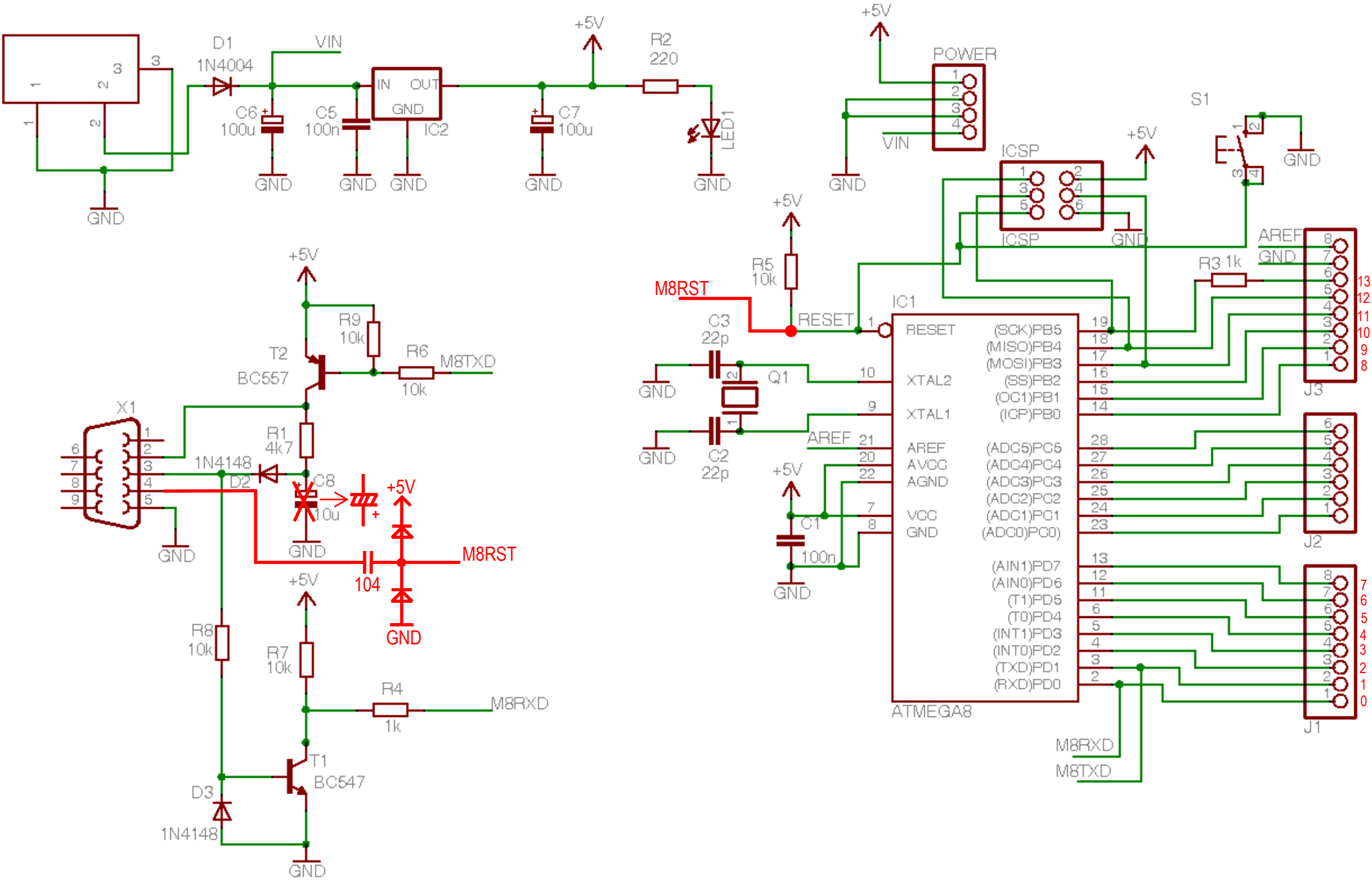
D1
1N4004
VIN
C6
100u
C5
100n
IN
OUT
GND
IC2
+5V
R2
220
C7
100u
LED1
GND
POWER
VIN
ICSP
S1
R5
10k
M8RST
RESET
C3
22p
Q1
C2
22p
AREF
C1
100n
IC1
RESET
XTAL2
XTAL1
AREF
AVCC
AGND
VCC
GND
(SCK)PB5
(MISO)PB4
(MOSI)PB3
(SS)PB2
(OC1)PB1
(ICP)PB0
(ADC5)PC5
(ADC4)PC4
(ADC3)PC3
(ADC2)PC2
(ADC1)PC1
(ADC0)PC0
(AIN1)PD7
(AIN0)PD6
(T1)PD5
(T0)PD4
(INT1)PD3
(INT0)PD2
(TXD)PD1
(RXD)PD0
ATMEGA8
R3 1k
J3
J2
J1
M8RXD
M8TXD
R9
10k
R6
10k
T2
BC557
X1
R1
4k7
1N4148
D2
C8
10u
104
R8
10k
R7
10k
R4
1k
T1
BC547
D3
1N4148